TECH PUBLIC
台舟电子

TPBT4448-1006
Switching Diode

www.sot23.com.tw

Features and benefits

- Extremely small surface mounting type.
- High Speed.

Application information

- High speed switching

RoHS





DFN1006-2L

TECH PUBLIC

Absolute Maximum Ratings (Tamb=25°C unless otherwise specified)

Parameter	Symbol	Value	Unit
Peak reverse voltage	V_{RM}	90	V
DC reverse voltage	V_R	80	V
Peak forward current	I_{FM}	225	mA
Mean rectifying current	I_O	100	mA
Surge current (1s)	I_{SURGE}	500	mA
Junction temperature	T_j	125	°C
Storage temperature	T_{stg}	-40 to +125	°C

Electrical Characteristics (TA=25°C unless otherwise specified)

Characteristic	Symbol	Max	Unit
Forward voltage (I_F=100mA)	V_F	1.2	V
Reverse current (V_R=80V)	I_R	0.1	uA
Capacitance between terminals (V_R=0.5V,f=1MHz)	C_T	3	pF
Reverse recovery time (V_R=6V,I_F=10mA,R_L=100Ω)	T_{rr}	4	nS

Outline Drawing - DFN1006-2

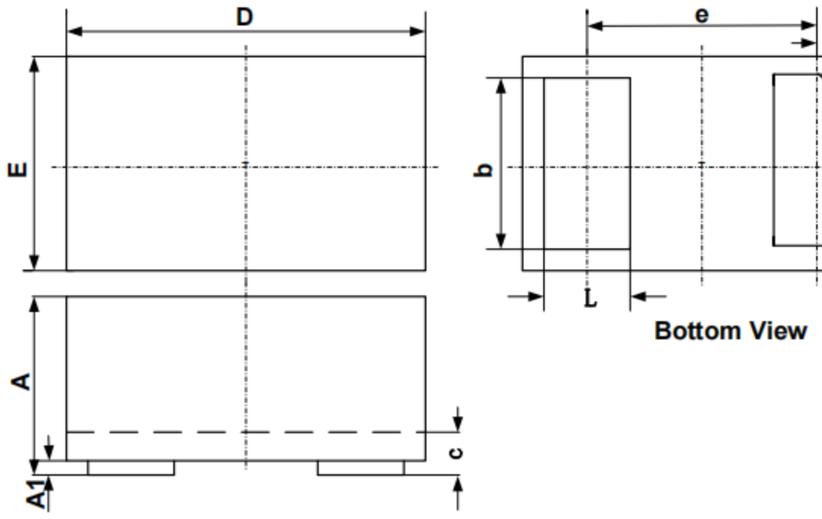

SYM	DIMENSIONS					
	MILLIMETERS			INCHES		
	MIN	NOM	MAX	MIN	NOM	MAX
A	0.45	0.50	0.55	0.018	0.020	0.022
A1	0.00	0.02	0.05	0.000	0.001	0.002
b	0.45	0.50	0.55	0.018	0.020	0.022
c	0.12	0.15	0.18	0.005	0.006	0.007
D	0.95	1.00	1.05	0.037	0.039	0.041
e	0.65 BSC			0.026 BSC		
E	0.55	0.60	0.65	0.022	0.024	0.026
L	0.20	0.25	0.30	0.008	0.010	0.012
h	0.07	0.12	0.17	0.003	0.005	0.007

Land Pattern - DFN1006-2

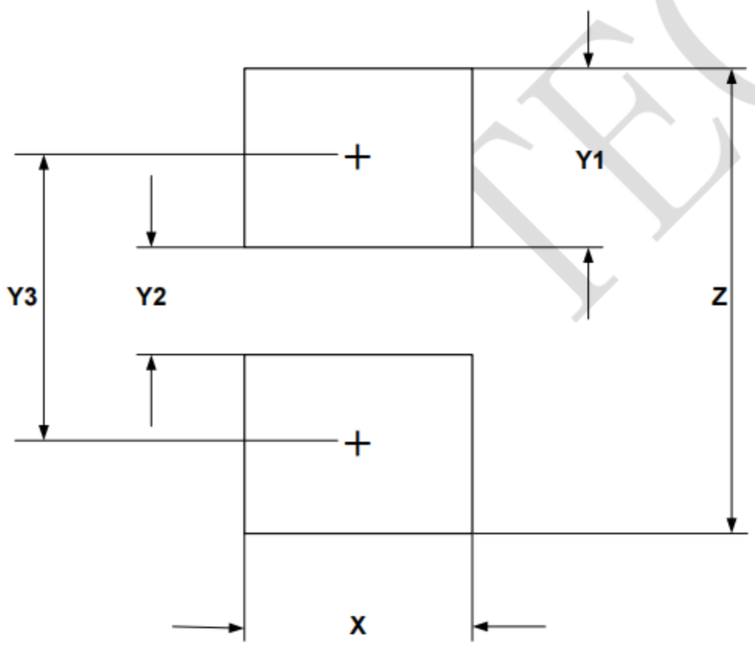

SYM	DIMENSIONS	
	MILLIMETERS	INCHES
X	0.60	0.024
Y1	0.50	0.020
Y2	0.30	0.012
Y3	0.80	0.032
Z	1.30	0.052

TECHPUBLIC