TECH PUBLIC
台舟电子

TPUPG2179TB

GaAs DC-3 GHz SPDT Switch

www.sot23.com.tw

Description

The TPUPG2179 is a GaAs SPDT switch operating at DC-3 GHz in a low cost SOT-363 plastic lead (Pb) free package. The TPUPG2179 features low insertion loss with very low DC power consumption. This switch can be used in many wireless digital communication systems like IEEE 802.11b/g WLAN and Bluetooth for transmit/receive selection or antenna diversity function.

Features

- Low Insertion Loss: 0.4dB @ 2.5GHz
- High Isolation: 30dB @ 2.5GHz
- P_{-1dB}: +31dBm Typical @ +3V
- IIP3: 55dBm @ Input Power up to 20dBm
- Good Reliability Performance
- SOT-363 6 Lead Plastic Package
- T/R Switches in 802.11b/g/n WLAN Systems

Applications

- WLAN
- Mobile Phone
- Bluetooth
- DECT
- PHS
- GPS

■ Pin Connections and Internal Block

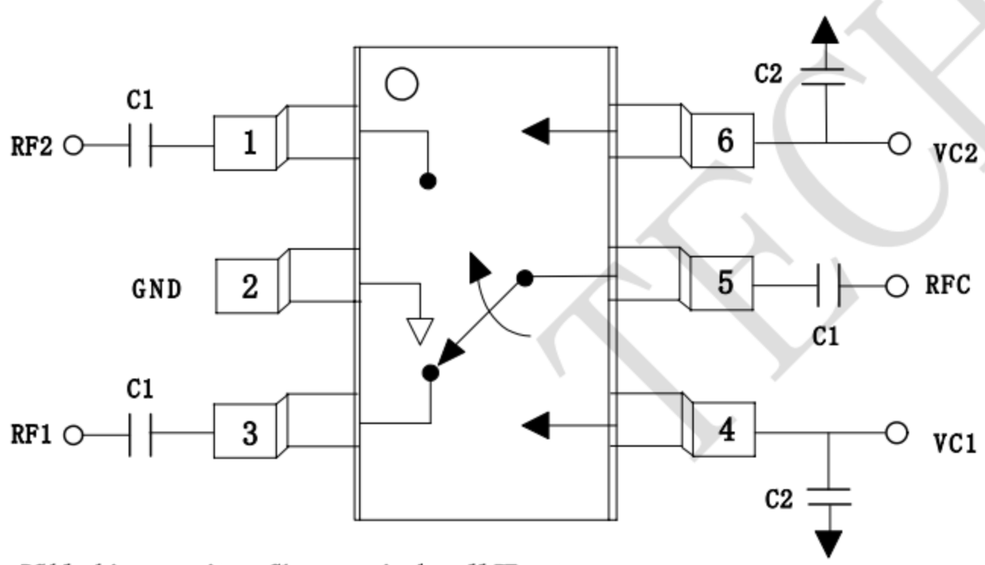

DC blocking capacitors C1 are required on all RF ports.
C1=56pF , C2=1000pF for operation >500MHz

■ Pin Assignment

Pin No.	Pin Name
1	RF2
2	GND
3	RF1
4	VC1
5	RFC
6	VC2

■ Reliability Testing Items

No.	Testing Items
1	Temperature Cycling Testing + IR Reflow
2	Pressure Cooker Testing + IR Reflow
3	Thermal Humidity Testing
4	Working Life
5	Electro-Static Discharge
6	Over Voltage
7	Over Power

All sample passed reliability testing

■ SW Truth Table

VC1	VC2	RFC-RF1	RFC-RF2
High	Low	Isolation	Insertion Loss
Low	High	Insertion Loss	Isolation

High: 2.8V to 5V
Low: -0.2V to 0.2V

Marking:S79 Or G4C

TECHPUBLIC

WWW.TECHPUBLIC.COM.TW

Absolute Maximum Ratings

Parameter	Value	Unit
Switch Control VC1 , VC2	-6.0 to +6.0 Note	V
RF input Power (>500MHz)	33	dBm
Operating Temperature	-40 to +85	℃
Storage Temperature	-65 to +150	℃

Note $|VC1-VC2| \leqq 6.0V$

■ Electrical Specifications at 25°C with 0, +3V Control Voltages

Parameter	Test Conditions	Min.	Typ.	Max.	Unit
Insertion Loss	Input Power +25dBm DC–2.5GHz	-	0.4	0.6	dB
Isolation	Input Power +25dBm DC–2.5GHz	24	30	-	dB
VSWR	Insertion Loss state DC–2.5GHz	-	1.2	-	-
Input Power for 1 dB compression	2.5GHz	-	31	-	dBm
Second Harmonics	f=2.5GHz, P_{in}=25dBm	-	-75	-	dBc
Third Harmonics	f=2.5GHz, P_{in}=25dBm	-	-75	-	dBc
Intermodulation Intercept Point (IIP3)	For two tones (f=2.5GHz, 2.501GHz) @ Input power +20dBm	-	55	-	dBm
Switch Time	Rise, Fall (10/90% or 90/10% RF) On, Off (50% CTL to 90/10% RF)	-	50	-	ns
Control Current	Input Power +25dBm	-	4	100	μA

Notes: All measurements made in 50Ω system, unless otherwise specified.
DC=500MHz

TECHPUBLIC

PROTECTION PRODUCTS
Typical charateristics

(Vcc=0V/3.0V , 0.5~3GHz @+25 ℃)

Insertion Loss vs. Frequency

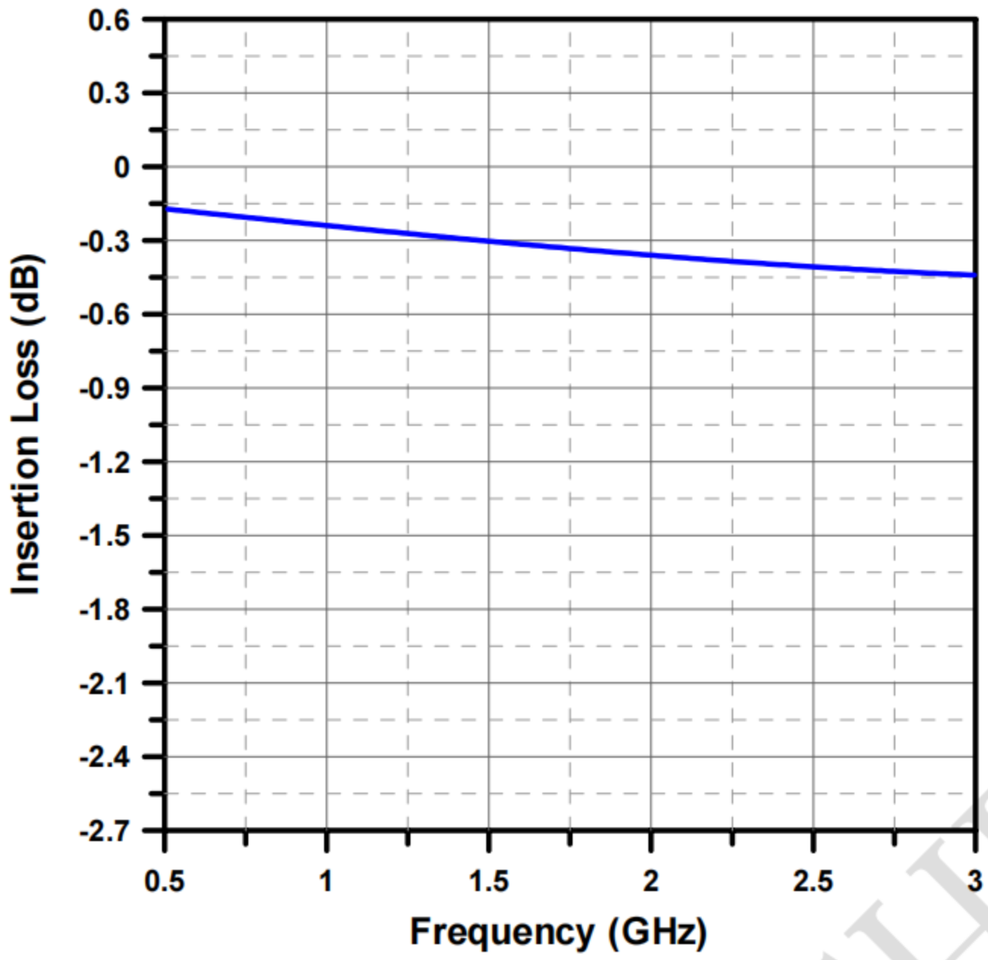

(Vcc=0V/3.0V , 0.5~3GHz @+25 ℃)

Isolation vs. Frequency
(RFC & RF1/RF2)

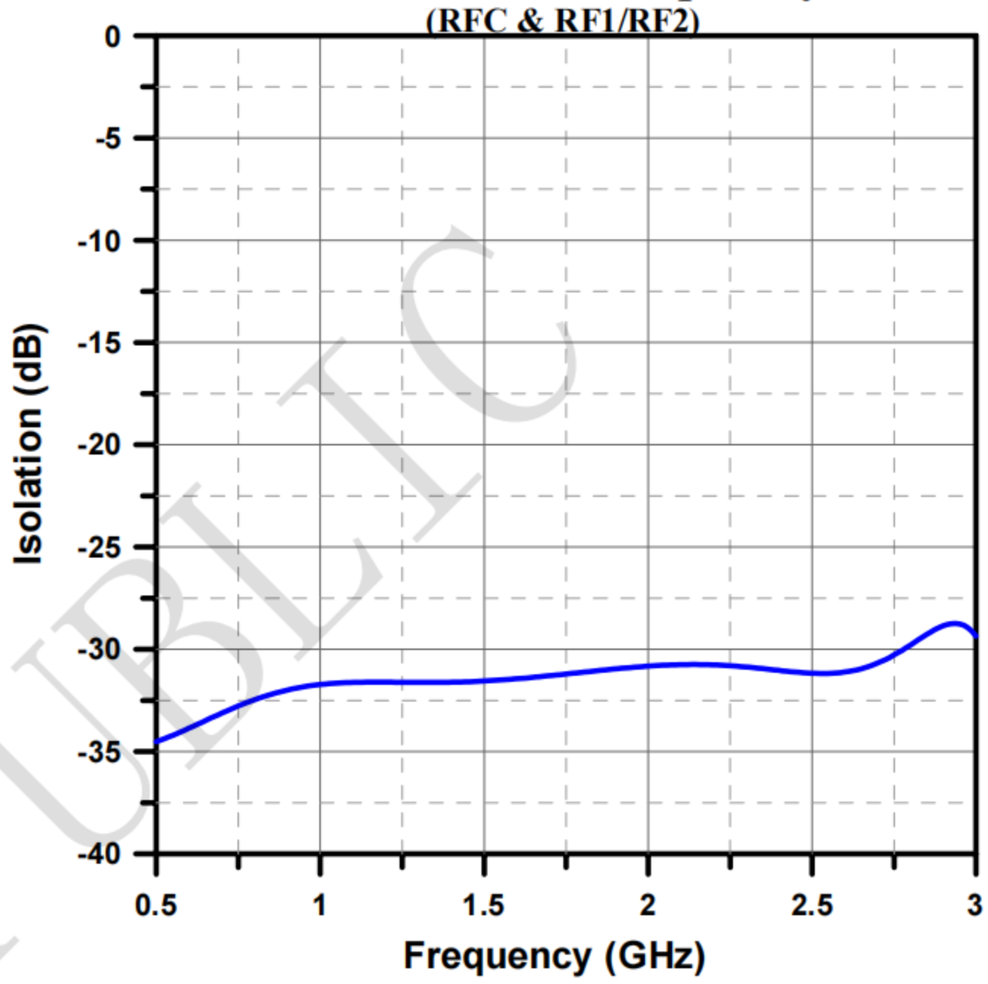

(Vcc=0V/3.0V , 0.5~3GHz @+25 ℃)

Return Loss vs. Frequency

(Vcc=0V/3.0V , 0.5~3GHz @+25 ℃)

Isolation vs. Frequency
(RF1 & RF2)

TECHPUBLIC

■

(Vcc=0V/3.0V , 2.5GHz@-40 ℃,+25 ℃,+80 ℃)

Insertion Loss vs. Input Power

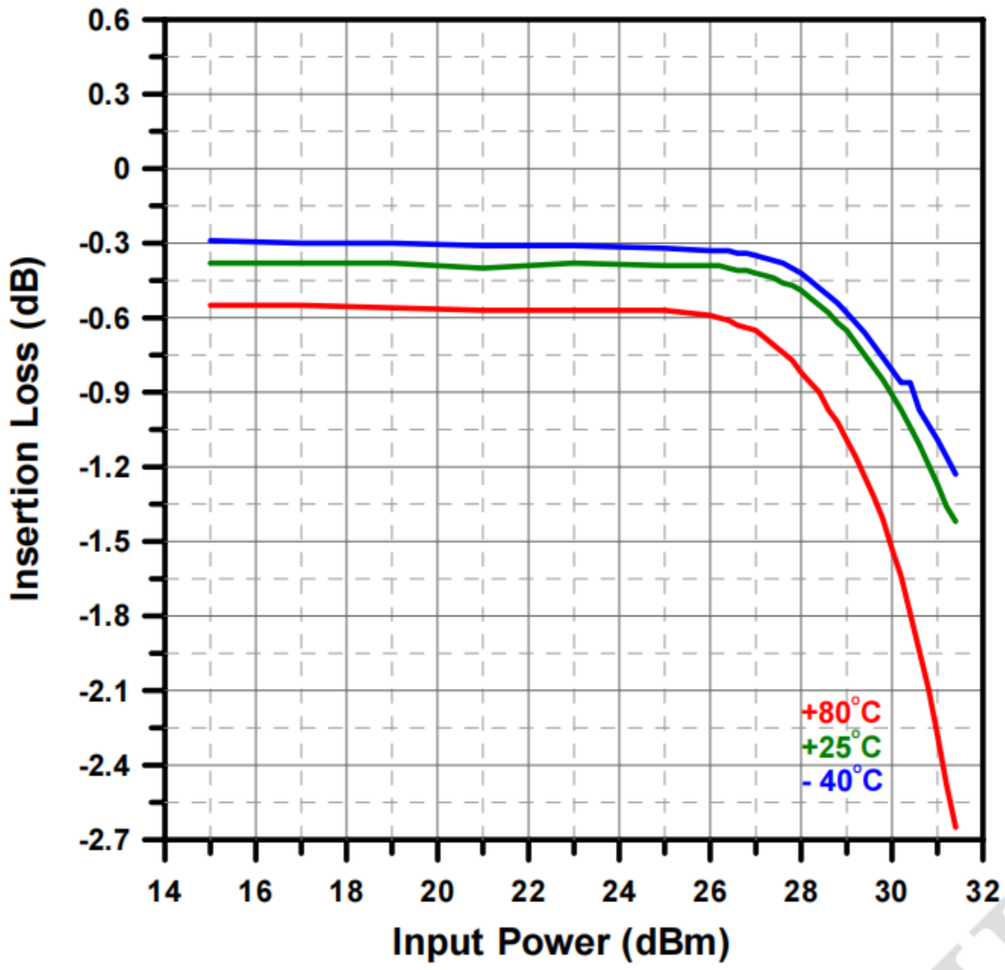

(Vcc=0V/3.0V , 2.5GHz@-40 ℃,+25 ℃,+80 ℃)

Isolation vs. Input Power

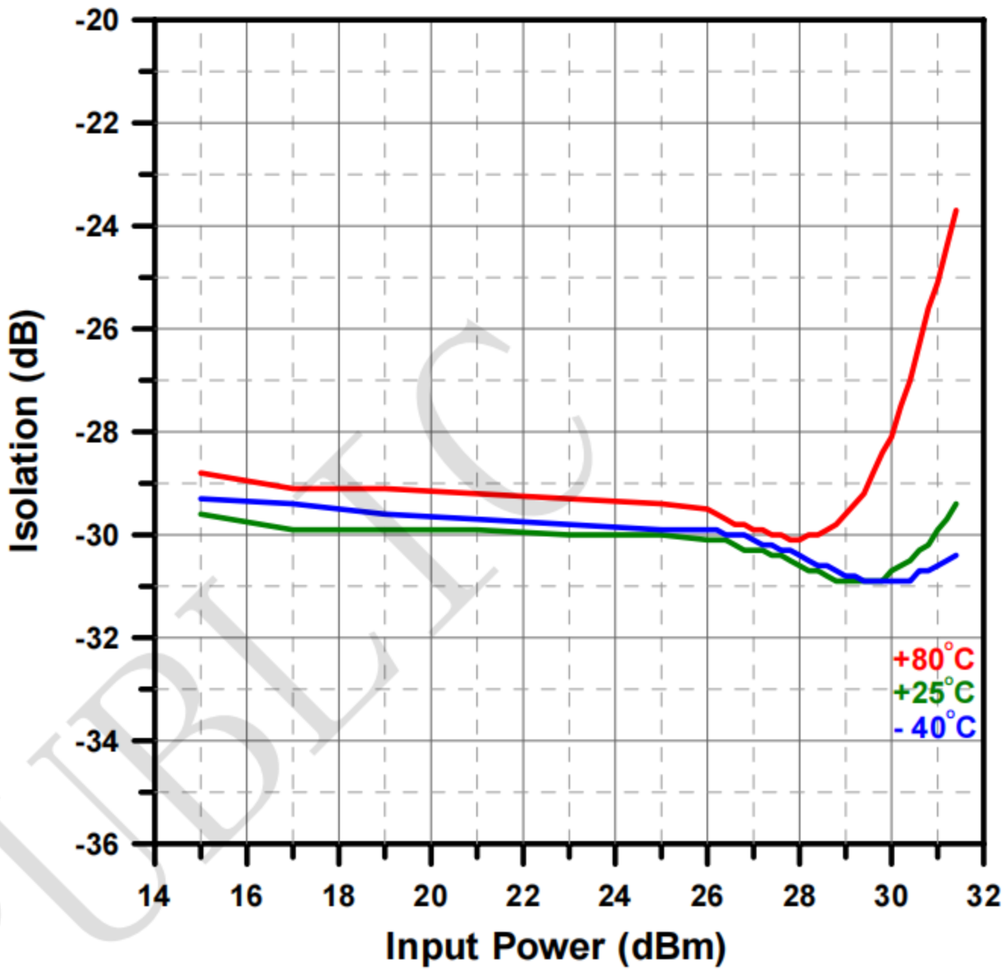

(Vcc=0V/3.0V , 2.5GHz@-40 ℃,+25 ℃,+80 ℃)

2nd Harmonics vs. Ambient Temperature

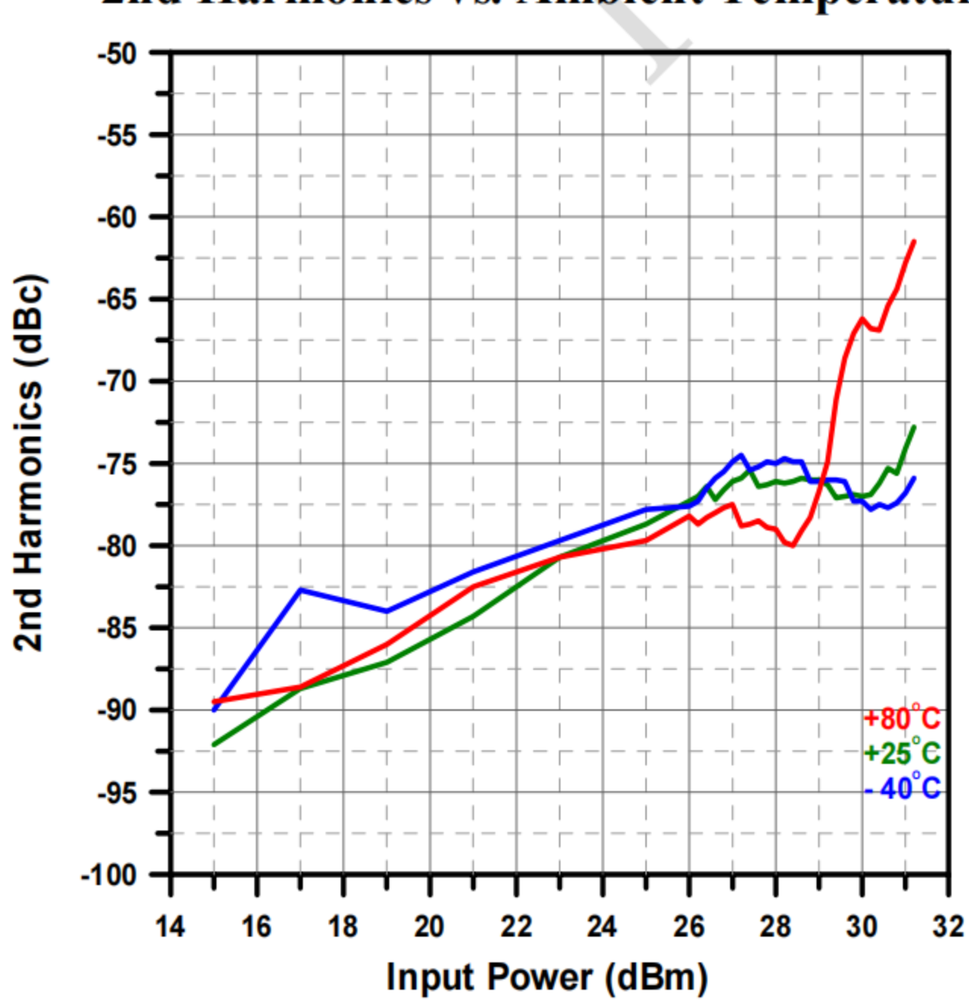

(Vcc=0V/3.0V , 2.5GHz@-40 ℃,+25 ℃,+80 ℃)

3rd Harmonics vs. Ambient Temperature

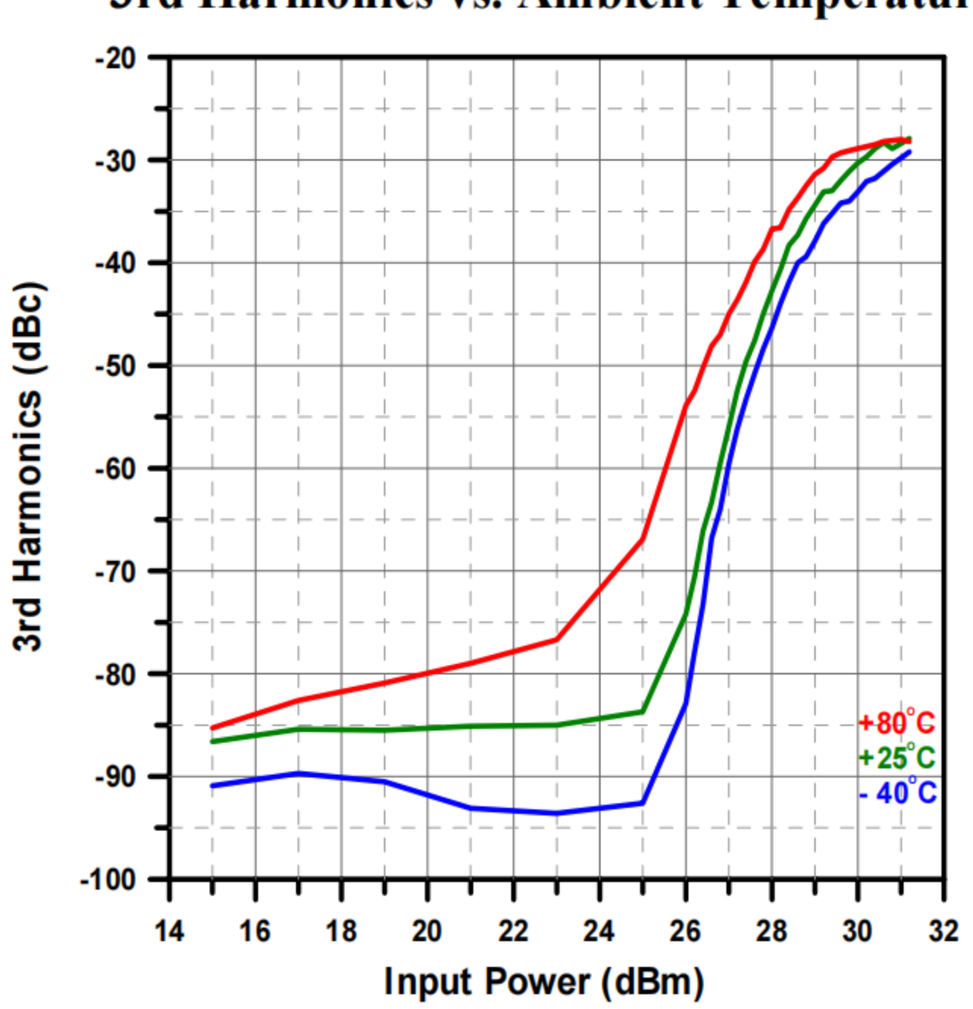

TECHPUBLIC

Outline Drawing - SOT363

(Unit: inch (mm))

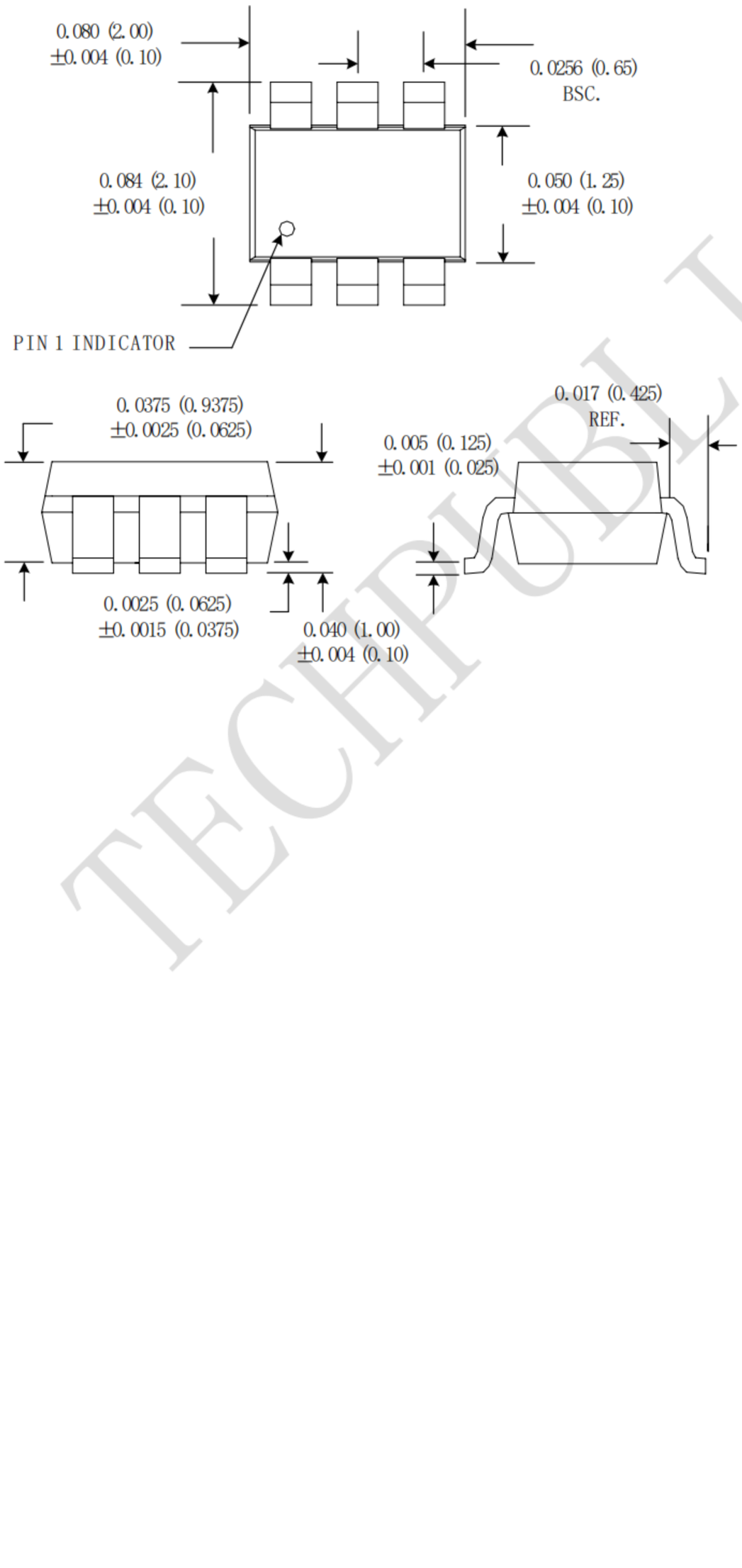

TECHPUBLIC