TECH PUBLIC
台舟电子

TP6818S5

High Efficiency 1.5MHZ,2A Step Down Regulator

www.sot23.com.tw

Features

- Up to 2A Max Output Current
- 2.7V to 5.5V Input Voltage Range
- Fixed 1.5MHz Switching Frequency
- Light Load Operation
- 100% Duty Operation
- Internal Compensation
- RoHS Compliant and Halogen Free
- Compact package: SOT23-5

Applications

- LCD TV
- Set Top Box
- Net PC
- Mini-Notebook PC
- Access Point Router

TYPICAL APPLICATION

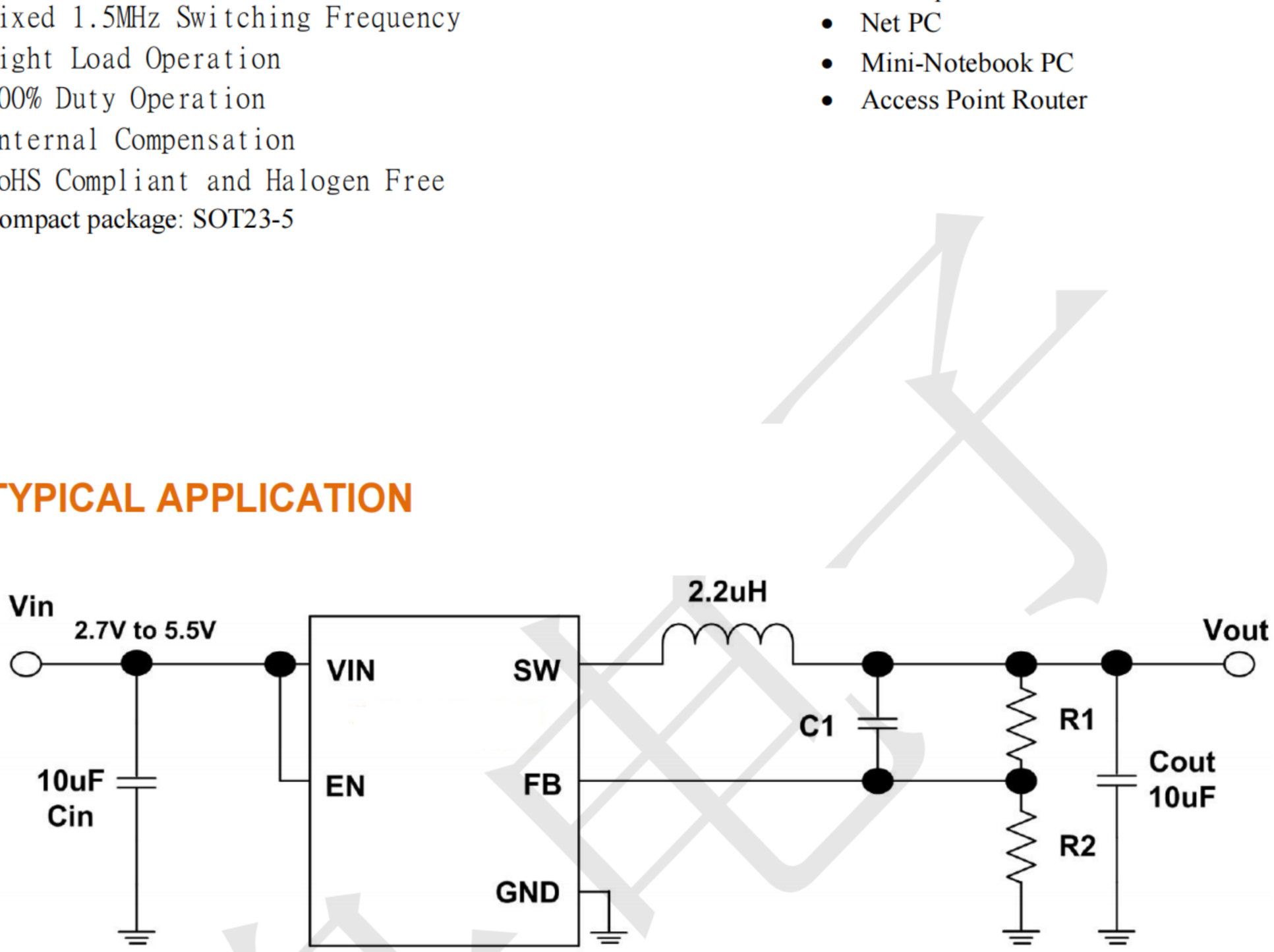

PIN CONFIGURATION

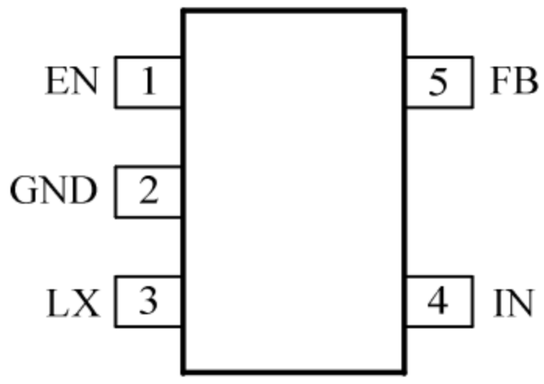

Pin Num	Pin Name	Description
1	EN	Turns on/turns off control input
2	GND	Power ground pin
3	SW	Inductor pin. Connect this pin to the switching node of inductor
4	VIN	Power input pin
5	FB	Output feefback pin

Electrical Characteristics (T_A=25 C unless otherwise noted)

(V_{IN}=5V, T_A = 25℃T unless otherwise specified)

Parameters	Condition	Min	Typ	Max	Units
Input Voltage		2.7		5.5	V
UVLO Threshold			2.5		V
UVLO Hysteresis			0.15		V
Quiescent Current	VFB =0.7V		40		μA
Shutdown Supply Current	VEN=0V			1	μA
Reference Voltage	VIN=2.7 to 5.5V	0.591	0.6	0.609	V
Reference Current			0.01		μA
Maximum Duty		100			%
Switching Frequency			1.5		MHz
Short Switching Frequency			380		KHz
Internal Soft-Start Time			1		ms
High Side MOSFET On-Resistance			110		mΩ
Low Side MOSFET On-Resistance			90		mΩ
High Side MOSFET Current Limit			4		A
High Side MOSFET Leakage Current	VIN=5V, VFB=0.7V			10	μA
EN Pin Pull-Low Resistance			1100		KΩ
EN Pin Input Low Voltage				0.4	V
EN Pin Input High Voltage		1.5			V
Output Discharge Switch On Resistance	V_{EN}=0V		60		Ω
Thermal Shutdown Temperature			160		°C

BLOCK DIAGRAM

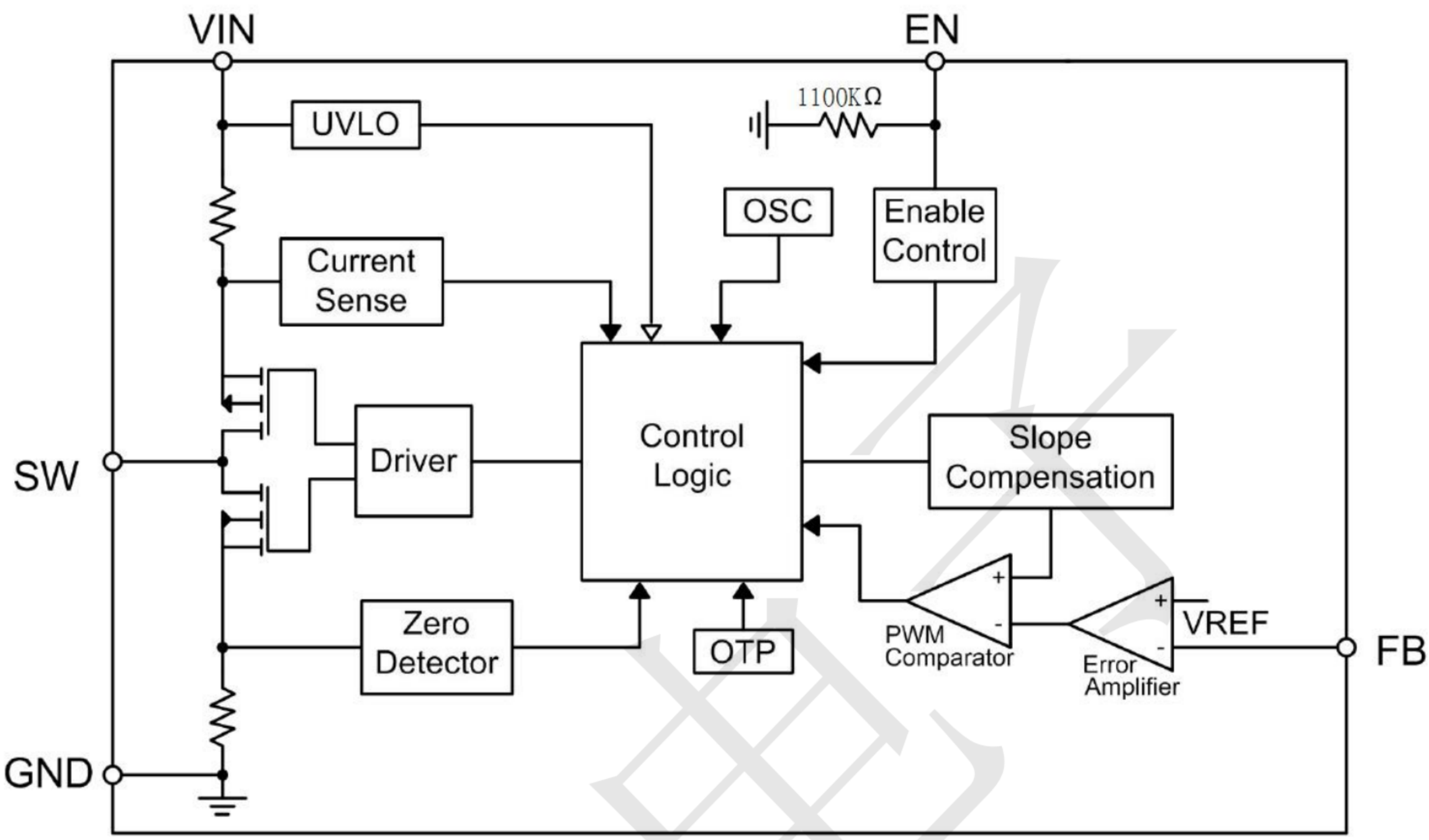

Package information

SOT23-5

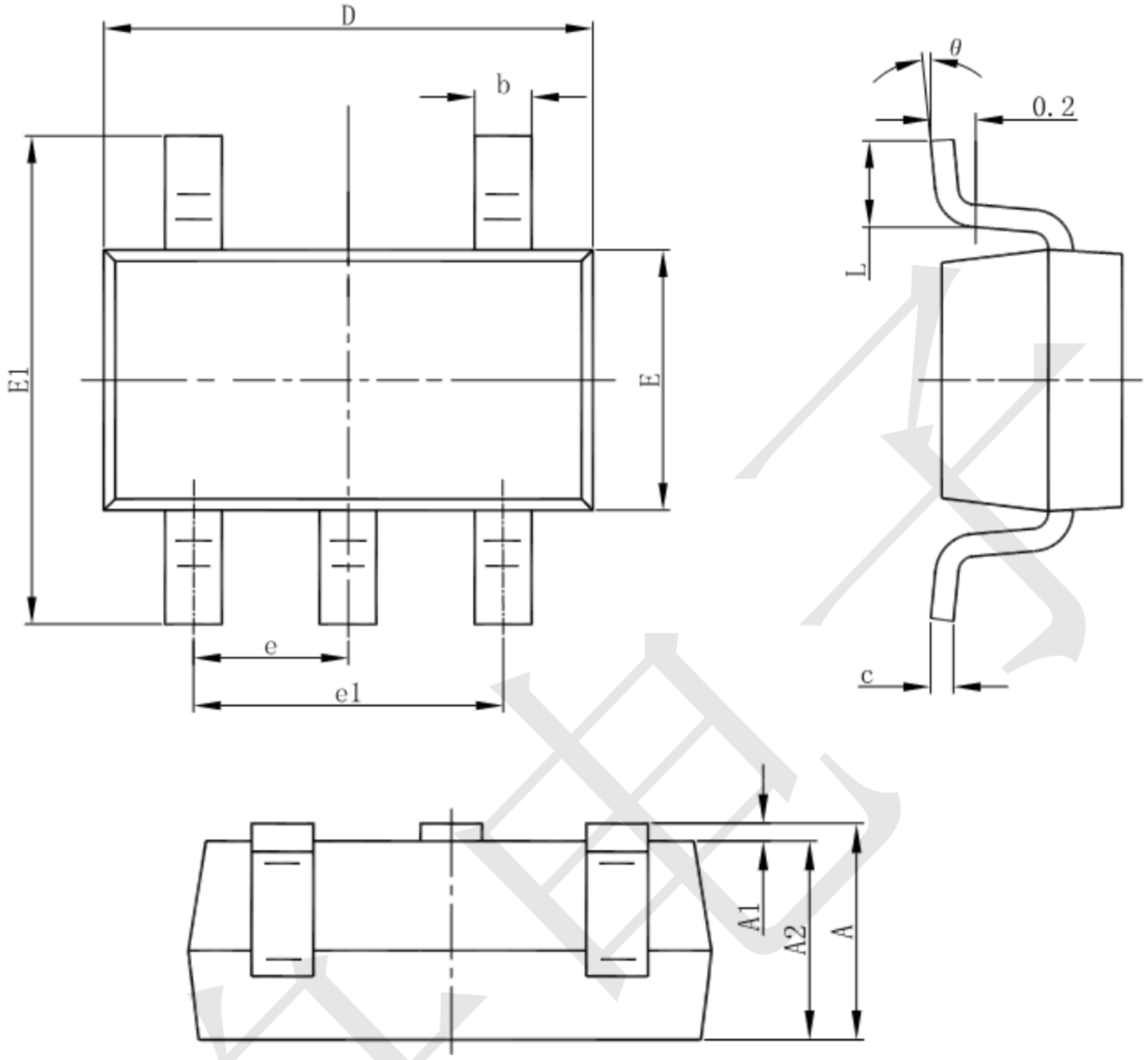

Symbol	Dimensions In Millimeters		Dimensions In Inches	
	Min	Max	Min	Max
A	1.050	1.250	0.041	0.049
A1	0.000	0.100	0.000	0.004
A2	1.050	1.150	0.041	0.045
b	0.300	0.500	0.012	0.020
c	0.100	0.200	0.004	0.008
D	2.820	3.020	0.111	0.119
E	1.500	1.700	0.059	0.067
E1	2.650	2.950	0.104	0.116
e	0.950(BSC)		0.037(BSC)	
e1	1.800	2.000	0.071	0.079
L	0.300	0.600	0.012	0.024
θ	0°	8°	0°	8°