TPGF193S6

GaAs DC-3 GHz SPDT Switch

Features

- Isolation: 25 dB @ 2.5 GHz
- Low Insertion Loss: 0.4 dB @ 2.5 GHz
- ESD Protection Exceeds JESD 22-A114 2000-V Human-Body Model
- Compact package: SOT23-6

Applications

- Industrial radio
- Smart Home
- Conventional medium power switch applications
- Applications with a transmitting and receiving system that require switching

General Description

The is a GaAs SPDT switch operating at DC-3 GHz in a low cost SOT23-6 plastic lead (Pb) free package. The is features low insertion loss with very low DC power consumption. This switch can be used in many wireless digital communication systems like IEEE 802.11b/g WLAN and Bluetooth for transmit/receive selection or antenna diversity function.

Pin out (top view)

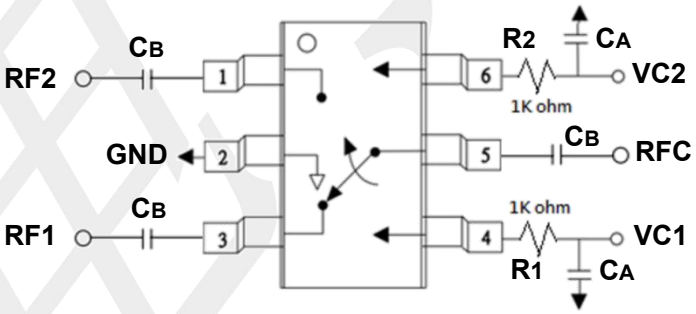

DC blocking capacitors C_B are required on all RF ports. C_B=56pF， C_A=1000pF for operating frequency > 500MHz.

Logic Table for Switch On-Path

VC1	VC2	RFC-RF1	RFC-RF2
0	1	Isolation	Insertion Loss
1	0	Insertion Loss	Isolation

‘1’ = +2.8V to +5V ； ‘0’ = -0.2V to +0.2V

Pin Configurations

Pin	Name	Function
1	RF2	RF output External connection of DC blocking capacitor is required during use
2	GND	Ground
3	RF1	RF output External connection of DC blocking capacitor is required during use
4	VC1	DC control voltage (ESD-HBM ±2000V)
5	RFC	RF output External connection of DC blocking capacitor is required during use
6	VC2	DC control voltage (ESD-HBM ±2000V)

Absolute Maximum Ratings

Parameter	Absolute Maximum
RF Input Power 0.5-2.5 GHz	+34 dBm
Control Voltage	+6V
Operating Temperatur	-40°C to +85°C
Storage Temperature	-65°C to +150°C
Human body model (HBM), VC1,VC2	±2000V

Note 1: Absolute Maximum Ratings are those values beyond which the life of a device may be impaired.

Electrical Specifications (at 25°C with 0, +3V Control Voltages)

Parameter	Test Conditions	Min.	Typ.	Max.	Unit
Insertion Loss	DC-2.5 GHz	--	0.4	0.6	dB
	2.5-3.0 GHz	--	0.5	0.7	dB
Isolation	DC-2.5 GHz	21	25	--	dB
	2.5-3.0 GHz	20	23	--	dB
Return Loss	DC-3.0 GHz	--	20	--	dB
Input Power for One dB Compression	0.5-3.0 GHz @ 0/+3V	--	30	--	dBm
	0.5-3.0 GHz @ 0/+5V	--	34	--	dBm
Switching Time		--	50	--	ns
Control Current		--	5	100	uA

Note: All measurements made in a 50 ohm system with 0/+3V control voltages, unless otherwise specified.

Typical Performance Data @ +25℃

Insertion Loss vs Frequency

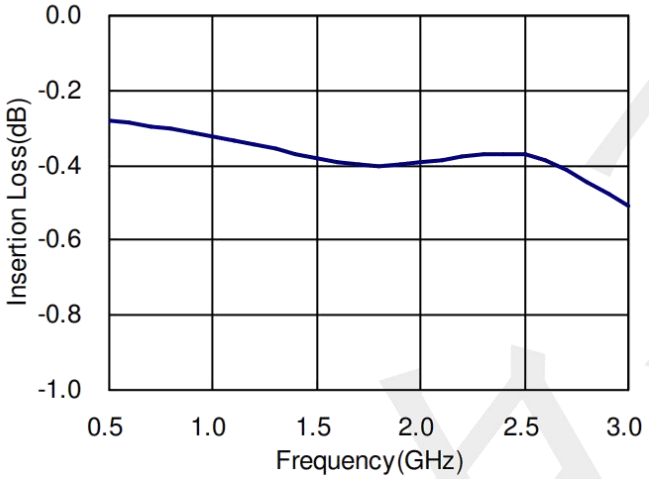

Isolation vs Frequency

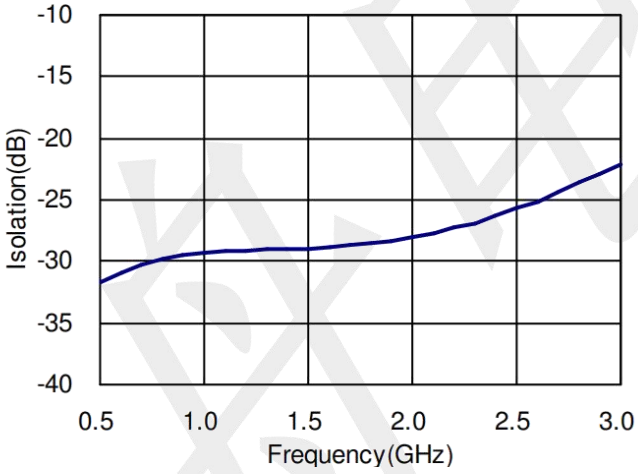

Return Loss vs Frequency

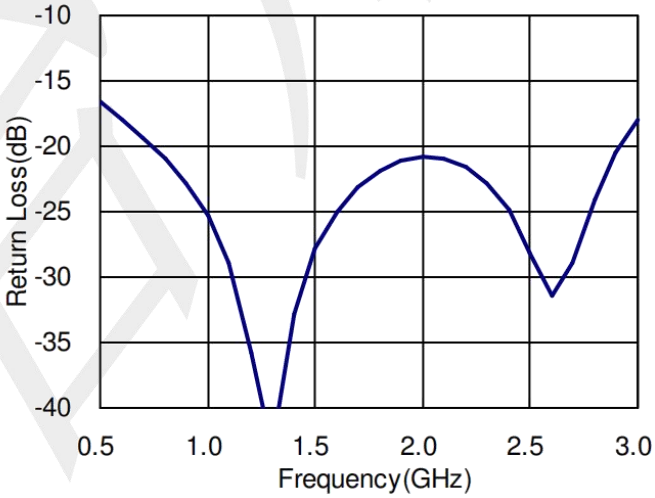

Evaluation Board Schematic

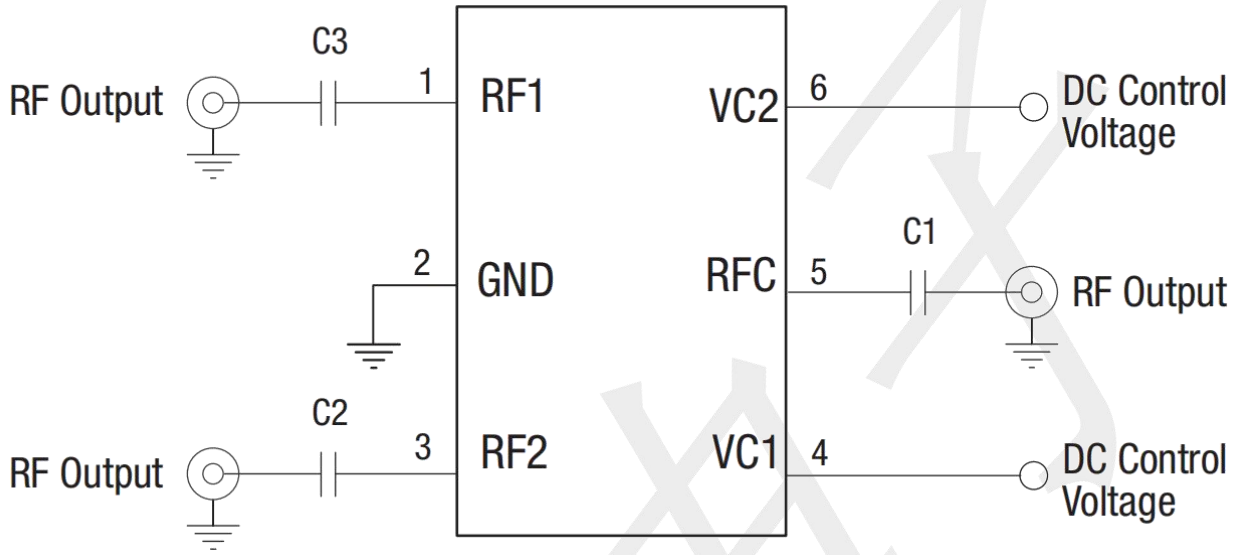

Evaluation Board Assembly Diagram

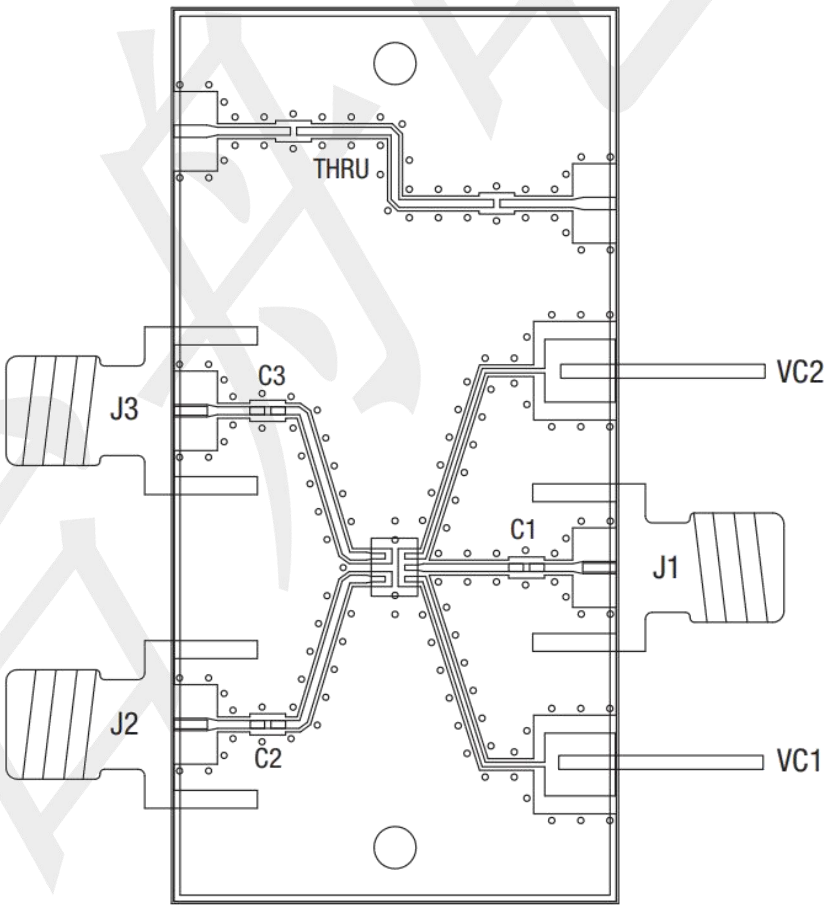

Package information (Unit: mm)

SOT23-6

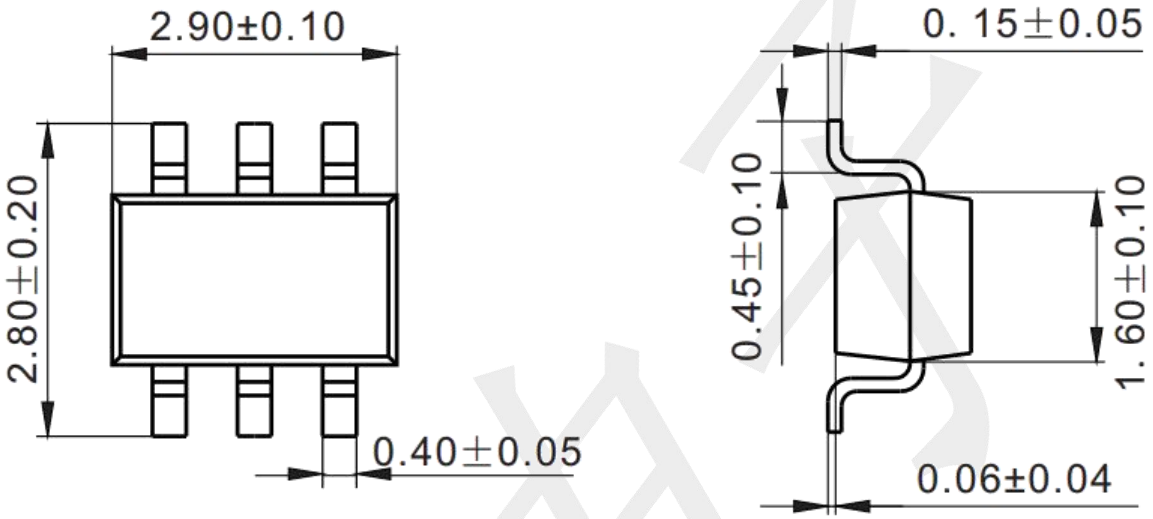

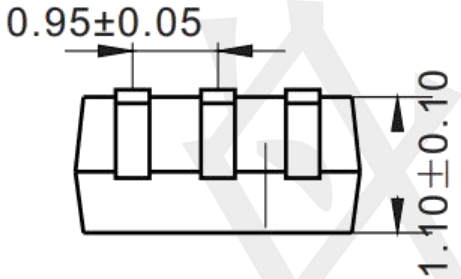

Mounting Pad Layout (unit: mm)

